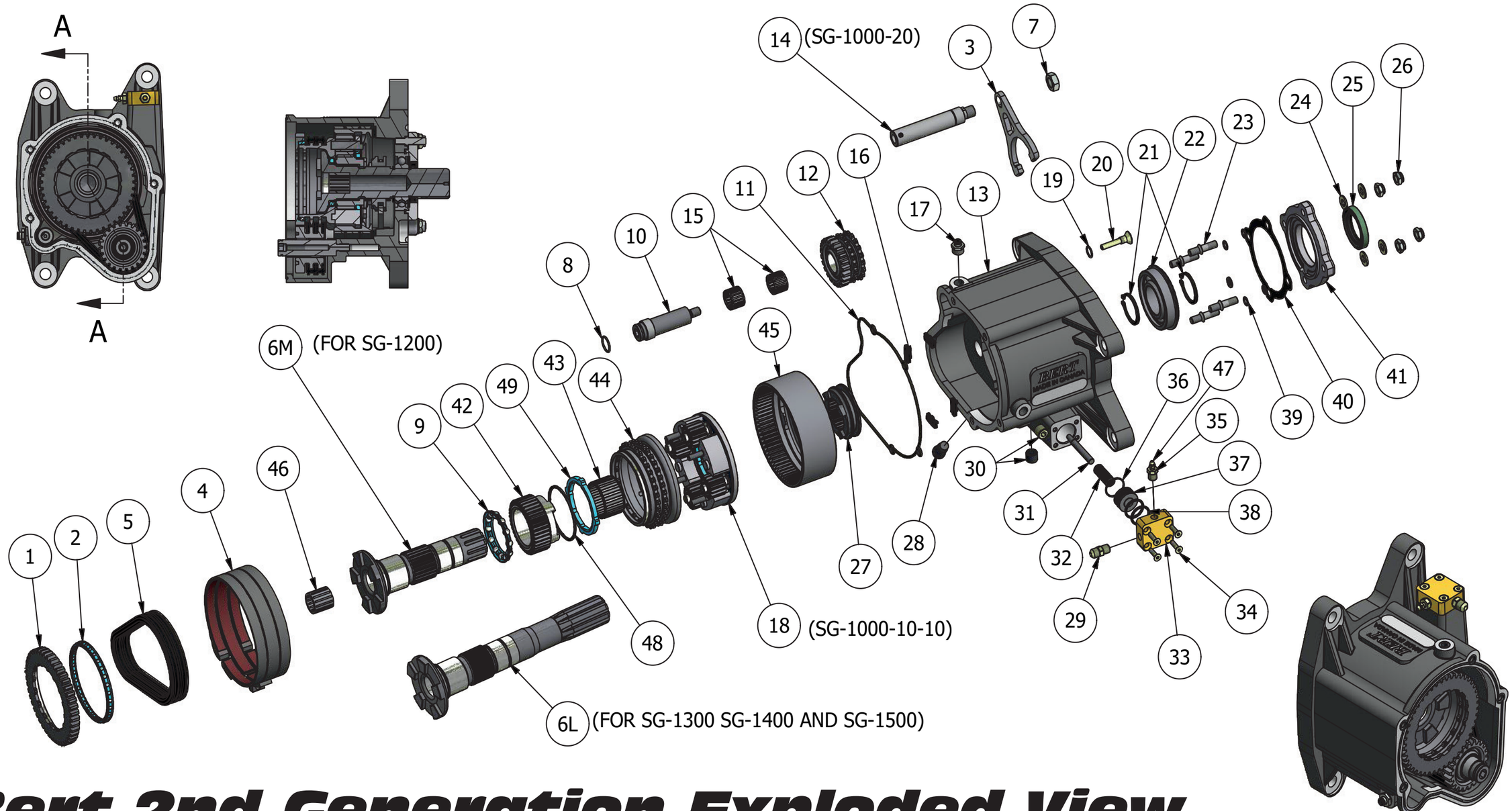

Bert 2nd Generation Exploded View